Current part is item (24) on diagram. Available at www.oshkoshequipment.com

(1) ITEM NO	(2) SMR CODE	(3) NSN	(4) CAGEC	(5) PART NUMBER	(6) DESCRIPTION AND USABLE ON CODES (UOC)	(7) QTY
					GROUP 0503 WATER MANIFOLD, HEADERS, THERMOSTATS, AND HOUSING GASKET	
					FIG. 115 THERMOSTAT AND HOUSING ASSEMBLY (M939A2)	
1	PAOZZ	5305012724810	15434	3906715	SCREW,CAP,HEXAGON H USED WITH ..... INTERNAL BYPASS SYSTEM ONLY..... UOC:ZAA,ZAB,ZAC,ZAD,ZAE,ZAF,ZAG,ZAH, ZAJ,ZAK,ZAL	2
2	PAOZZ	4720013026687	47457	20510473	HOSE,PREFORMED ..... UOC:ZAA,ZAB,ZAC,ZAD,ZAE,ZAF,ZAG,ZAH, ZAJ,ZAK,ZAL	1
3	PAOZZ	4730013316630	19207	11669079-5	CLAMP,HOSE ..... UOC:ZAA,ZAB,ZAC,ZAD,ZAE,ZAF,ZAG,ZAH, ZAJ,ZAK,ZAL	4
4	PAOZZ	4710012849032	47457	20510518	TUBE,BENT,METALLIC RADIATOR ..... UOC:ZAA,ZAB,ZAC,ZAD,ZAE,ZAF,ZAG,ZAH, ZAJ,ZAK,ZAL	1
5	PAOZZ	4720012793169	04827	20510481	HOSE,PREFORMED RADIATOR ..... UOC:ZAA,ZAB,ZAC,ZAD,ZAE,ZAF,ZAG,ZAH, ZAJ,ZAK,ZAL	1
6	PAOZZ	5975004515001	96906	MS3367-3-9	STRAP,TIEDOWN,ELECT ..... UOC:ZAA,ZAB,ZAC,ZAD,ZAE,ZAF,ZAG,ZAH, ZAJ,ZAK,ZAL	
7	PAOZZ	2930012726716	15434	3912800	WATER OUTLET,ENGINE OUTLET, USED..... WITH INTERNAL BYPASS SYSTEM ONLY ..... UOC:ZAA,ZAB,ZAC,ZAD,ZAE,ZAF,ZAG,ZAH, ZAJ,ZAK,ZAL	1
8	PAOZZ	5330012721142	15434	3060912	GASKET USED WITH INTERNAL BYPASS..... SYSTEM ONLY PART OF KIT P/N 3802622 PART OF KIT P/N 3802623 PART OF KIT P/N 3802452..... UOC:ZAA,ZAB,ZAC,ZAD,ZAE,ZAF,ZAG,ZAH, ZAJ,ZA, ZAL	1
9	PAOZZ	5305012724811	15434	3902112	SCREW,CAP,HEXAGON H ..... UOC:ZAA,ZAB,ZAC,ZAD,ZAE,ZAF,ZAG,ZAH, ZAJ,ZAK,ZAL	2
10	PAOZZ	2930012915867	15434	3911493	WATER OUTLET,ENGINE USED WITH ..... INTERNAL BYPASS SYSTEM ONLY..... UOC:ZAA,ZAB,ZAC,ZAD,ZAE,ZAF,ZAG,ZAH, ZAJ,ZAK,ZAL	1
11	PAOZZ	5330012878656	7U263	3914310	GASKET USED WITH INTERNAL BYPASS..... SYSTEM ONLY PART OF KIT P/N 3802622 PART OF KIT P/N 3802623 PART OF KIT P/N 3802452..... UOC:ZAA,ZAB,ZAC,ZAD,ZAE,ZAF,ZAG,ZAH, ZAJ,ZAK,ZAL	1
12	PAOZZ	6620012721716	15434	3907242	THERMOSTAT,FLOW CON USED WITH ..... INTERNAL BYPASS SYSTEM ONLY..... UOC:ZAA,ZAB,ZAC,ZAD,ZAE,ZAF,ZAG,ZAH, ZAJ,ZAK,ZAL	2

Current part is item (24) on diagram. Available at www.oshkoshequipment.com

Current part is item (24) on diagram. Available at www.oshkoshequipment.com

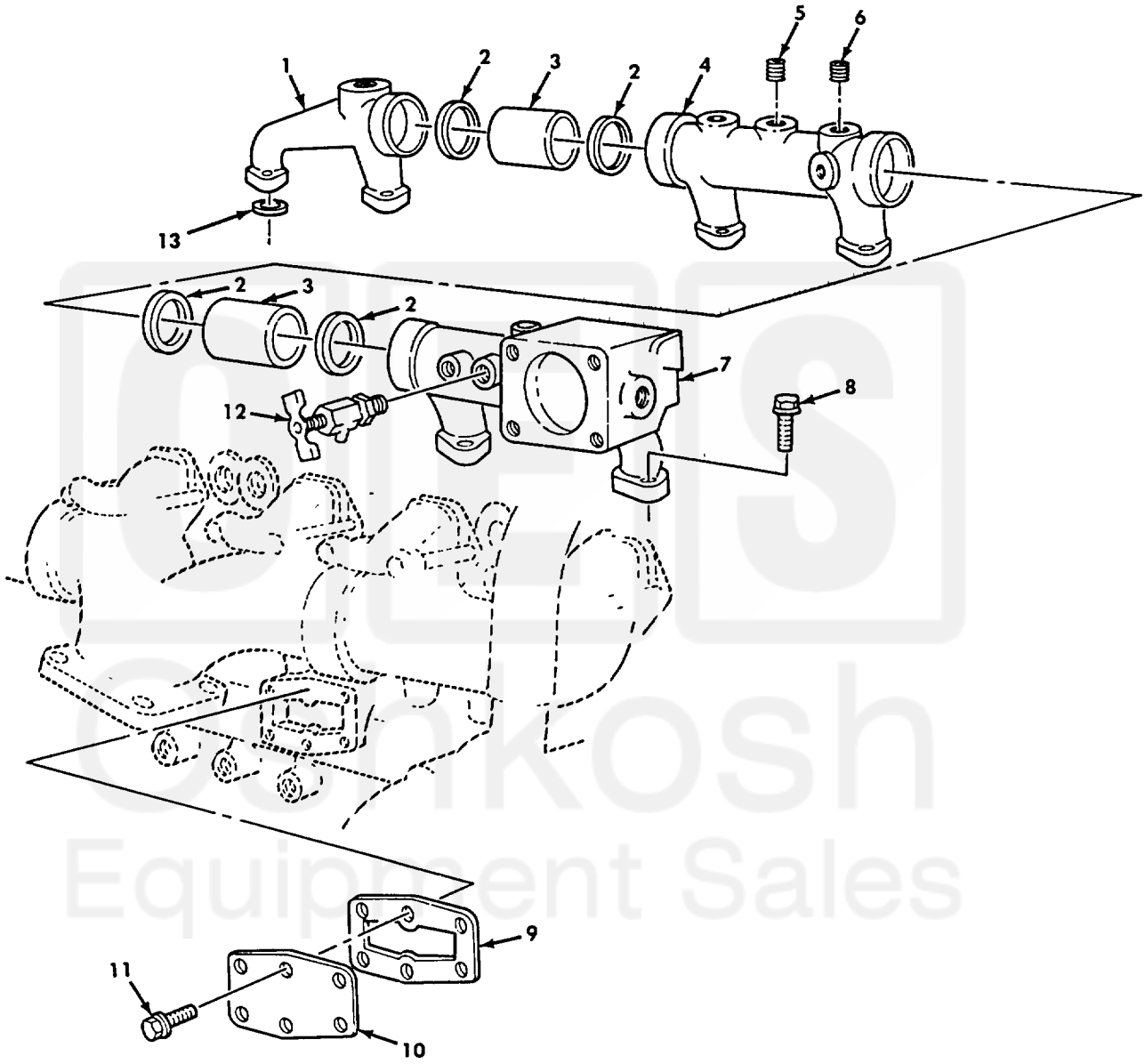

Figure 116. Water Manifold, Cover, and Mounting Hardware (M939, M939A1).

Current part is item (24) on diagram. Available at www.oshkoshequipment.com